Purvis Hanging Nestbox Plan

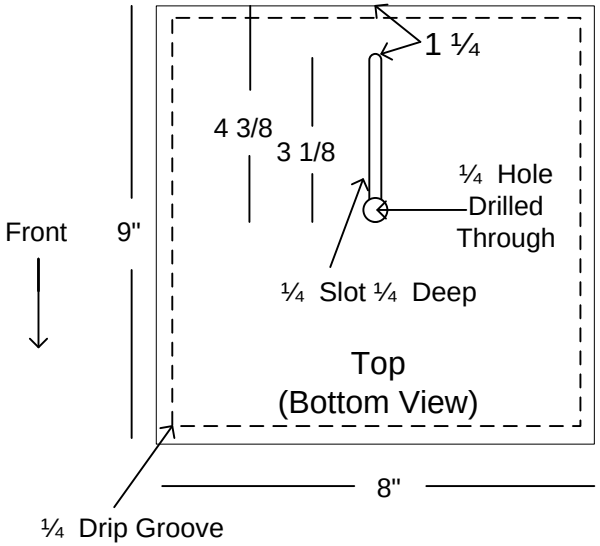

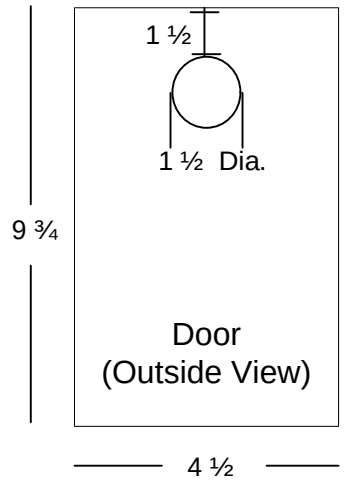

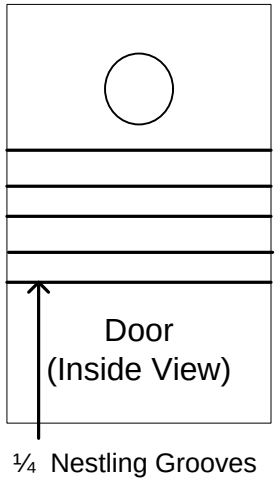

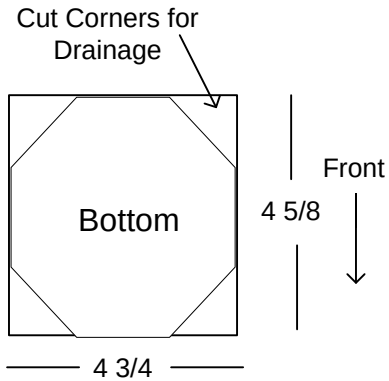

All Wood ¾
Actual Thickness

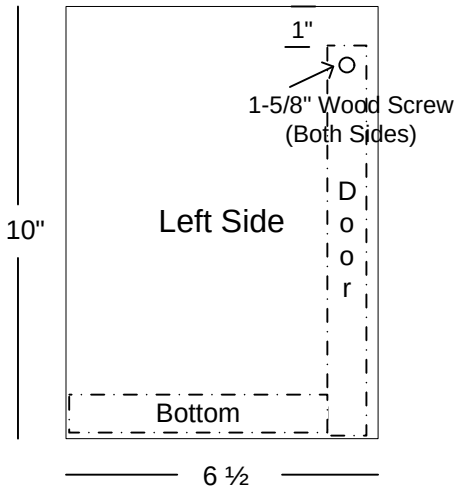

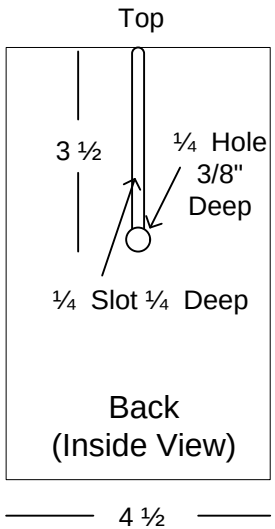

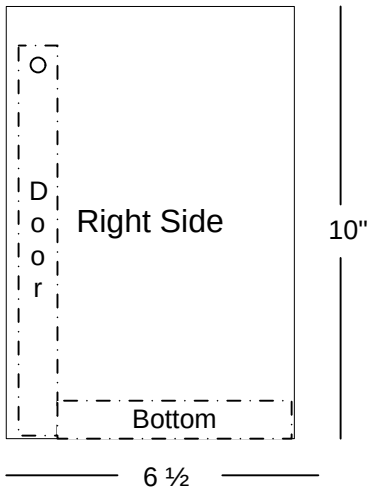

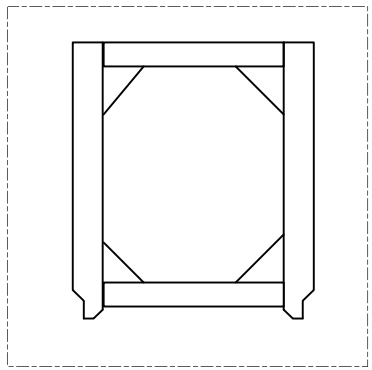

Assembled
(Top View)

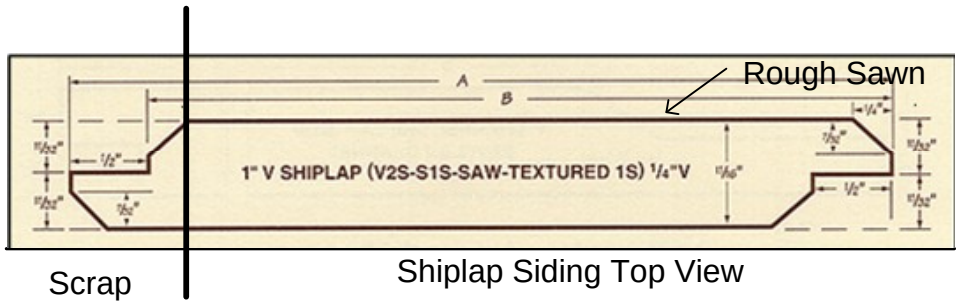

Shiplap Siding Top View

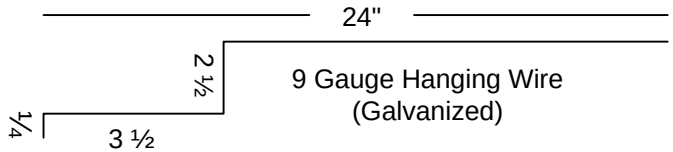

9 Gauge Hanging Wire
(Galvanized)

Michael G. Spohn
February 2007
mspohn@socalbluebirds.org